Model(s):
IS1500ZKAV1944
IS1500ZKAV2148
IS1500ZKAV2552
S/N: 1047 & Above

Main Harness Part No:
5400068

Control Panel Harness Part No:
5400067

Engine Harness Part No:
49973

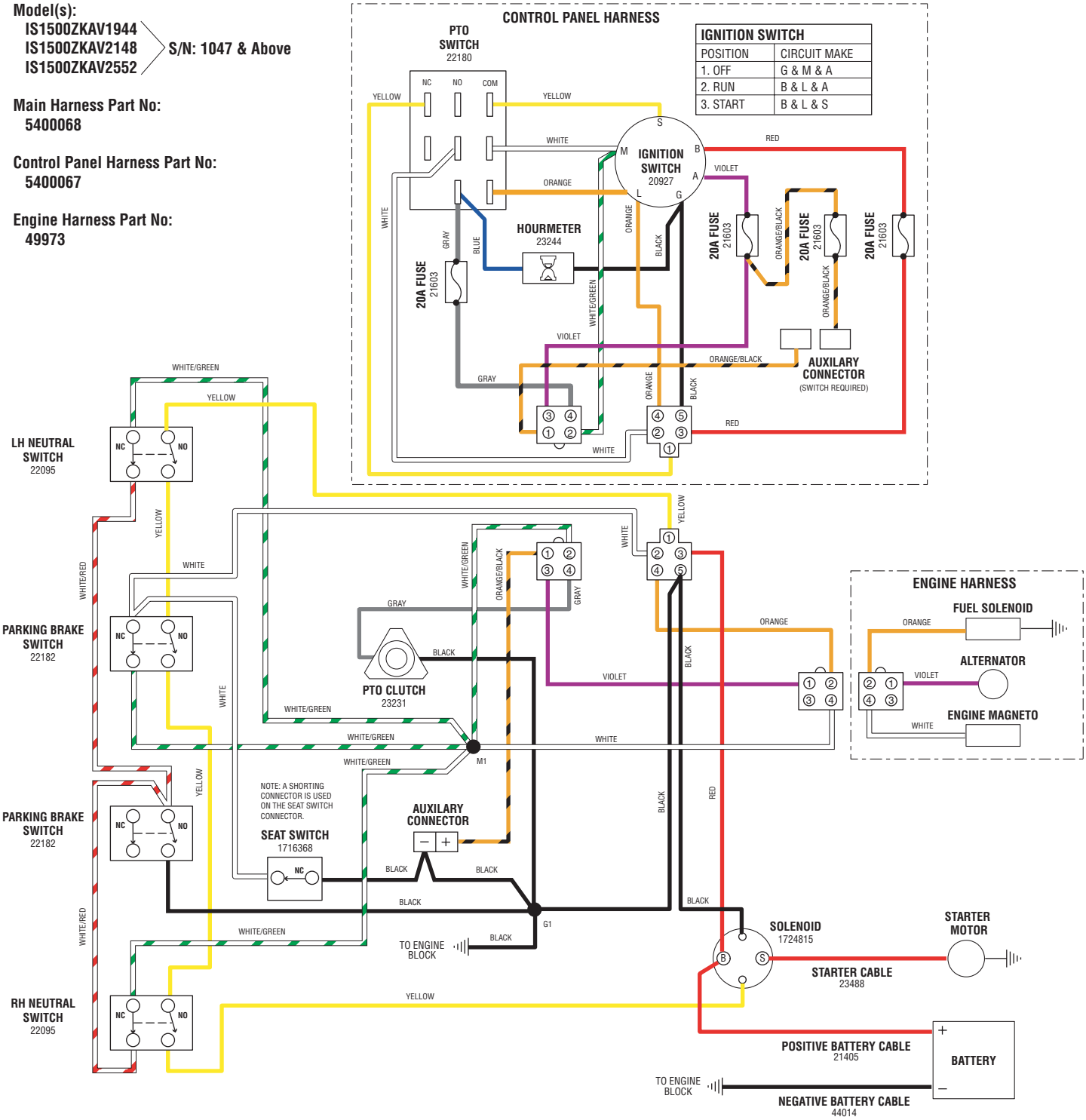

IGNITION SWITCH	
POSITION	CIRCUIT MAKE
1. OFF	G & M & A
2. RUN	B & L & A
3. START	B & L & S