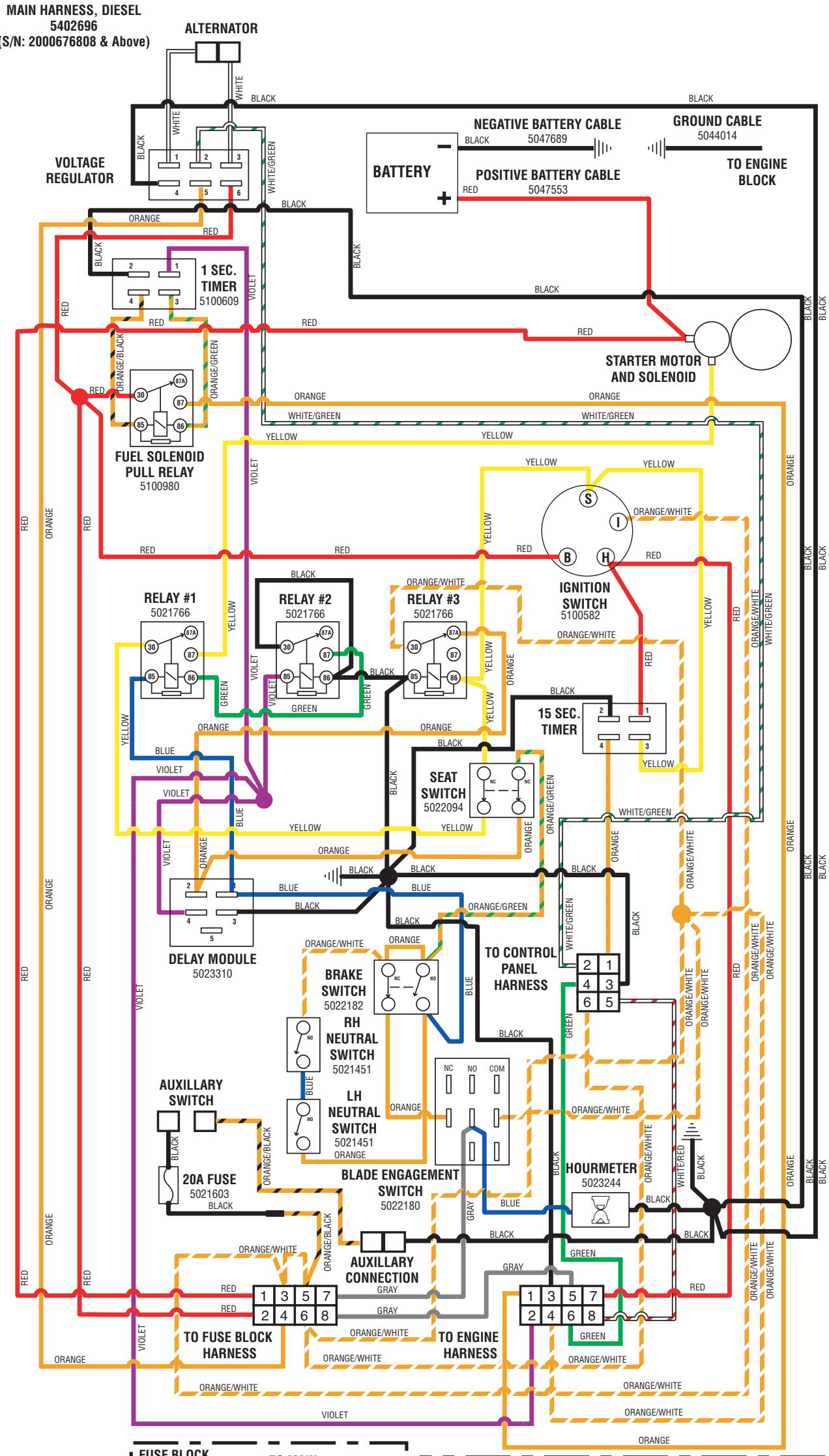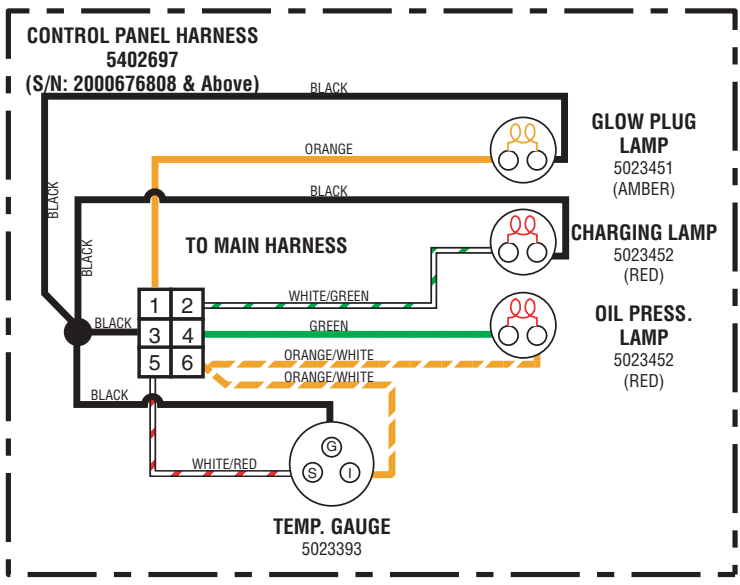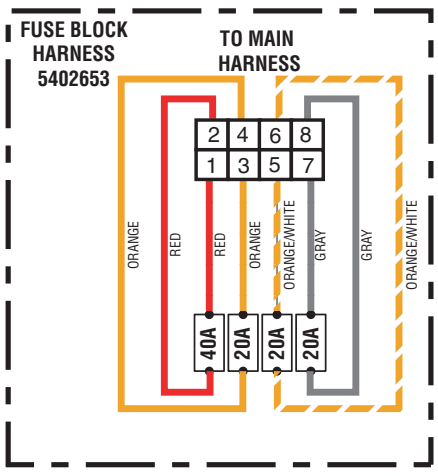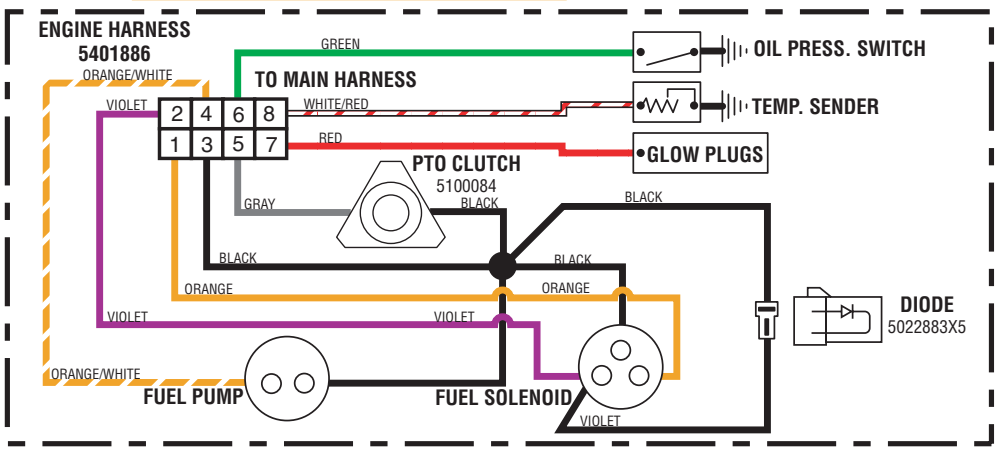MAIN HARNESS, DIESEL
5402696
(S/N: 2000676808 & Above)