Model(s):
IS3000ZFKAV2561 - S/N: 1855 & above
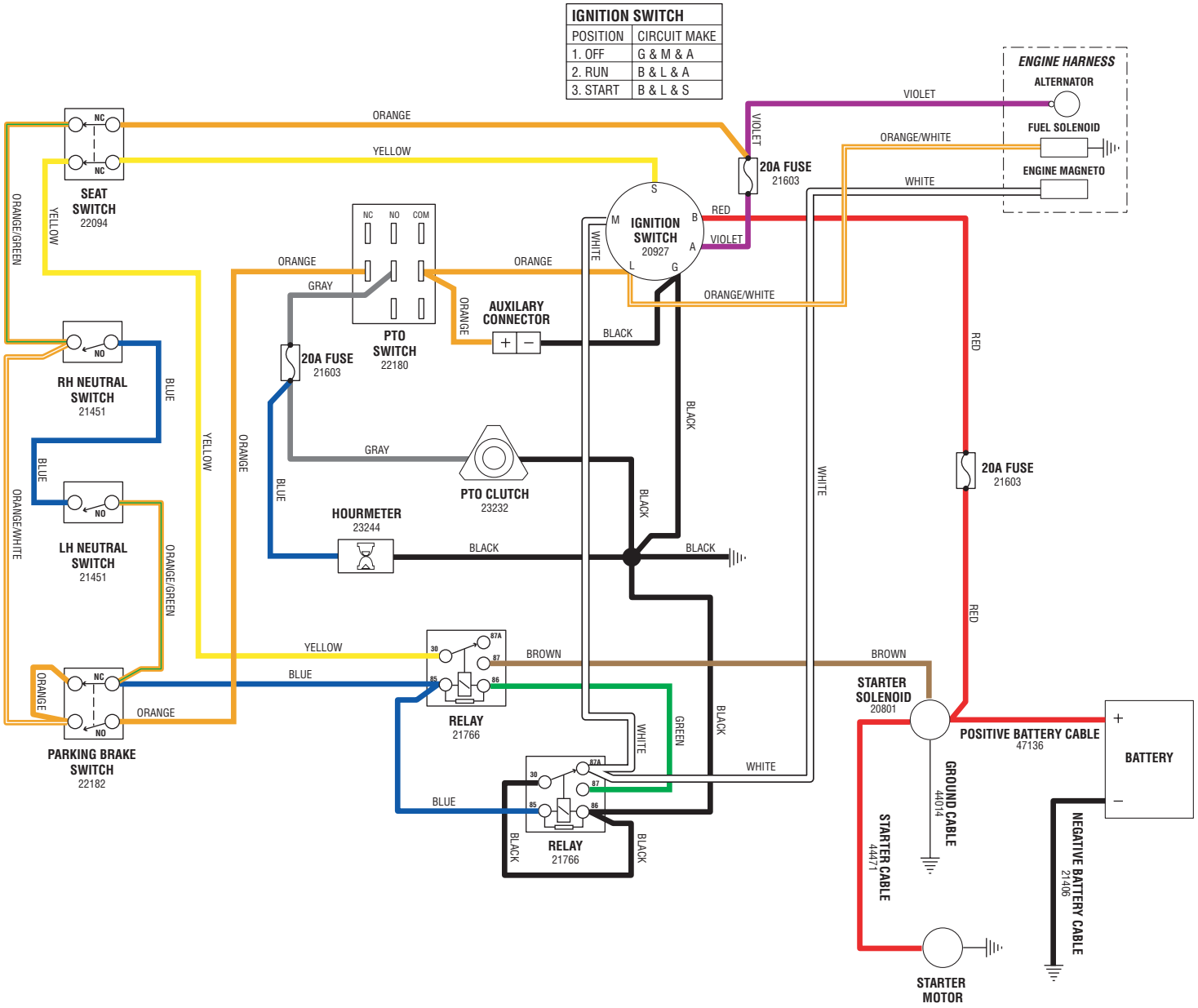
Wire Harness Part No:
49239