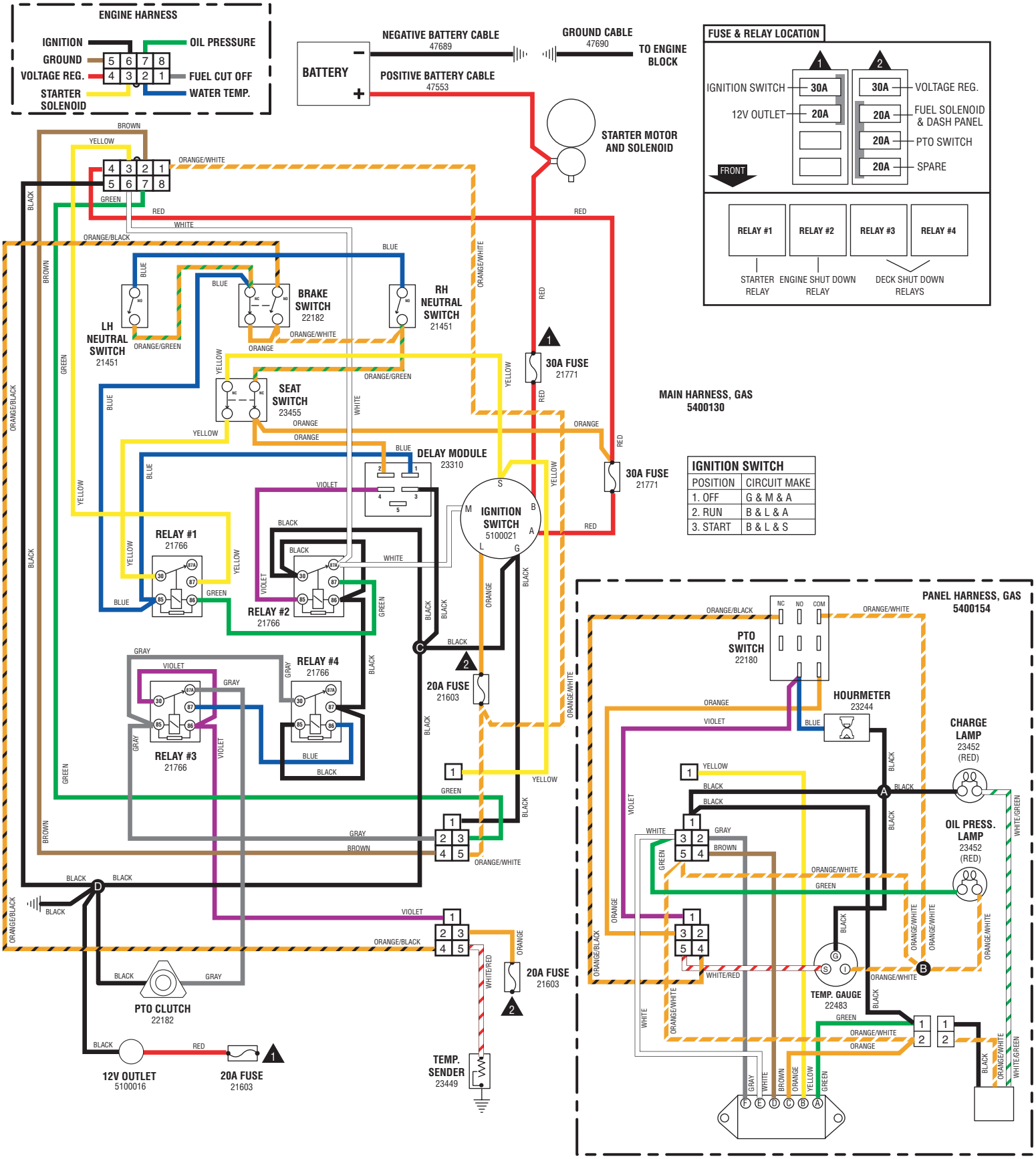

IGNITION SWITCH	
POSITION	CIRCUIT MAKE
1. OFF	G & M & A
2. RUN	B & L & A
3. START	B & L & S