Model(s):
IS5000Z/C31D - S/N: 411 - 1290
IS5000Z/C31DCE
IS5000ZC31D61CE

Wire Harness Part No's:
Main Harness - 48523
Gauge Harness - 48908

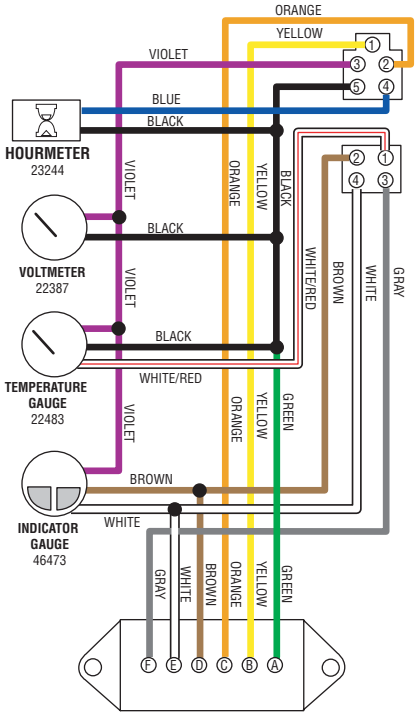

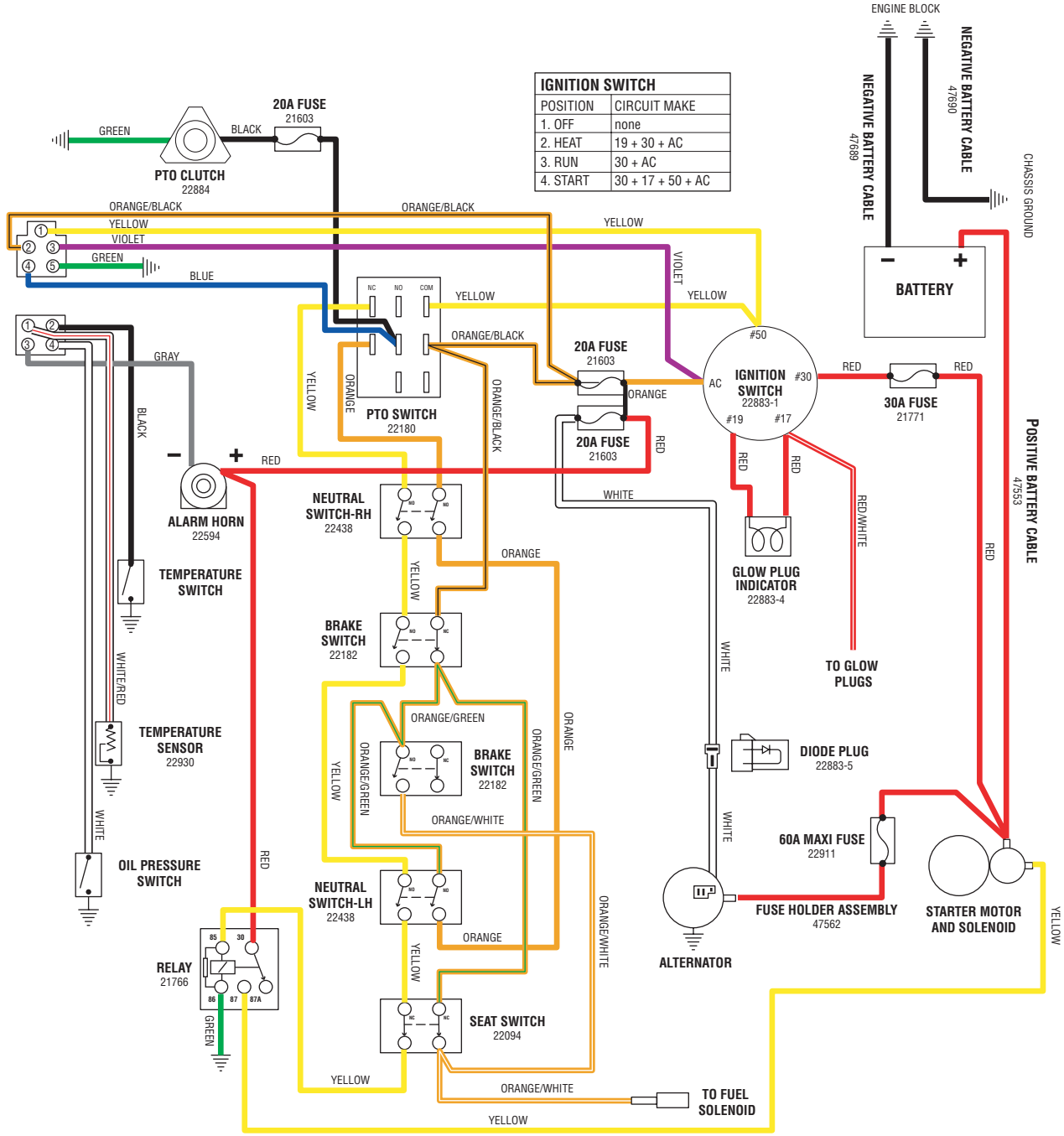

IGNITION SWITCH	
POSITION	CIRCUIT MAKE
1. OFF	none
2. HEAT	19 + 30 + AC
3. RUN	30 + AC
4. START	30 + 17 + 50 + AC